CATENE RASCHIANTI DIN 8167 E DIN 8165
Scraper chains DIN 8167 E DIN 8165

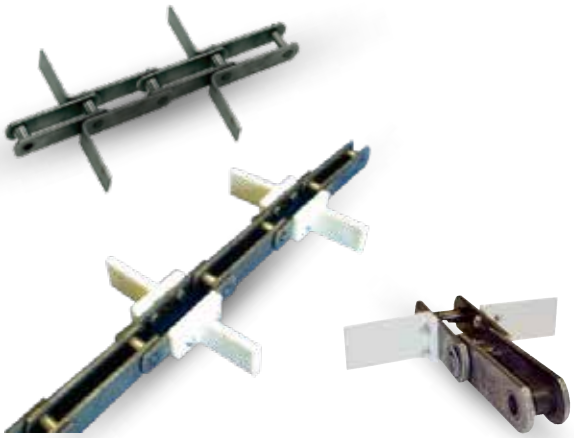

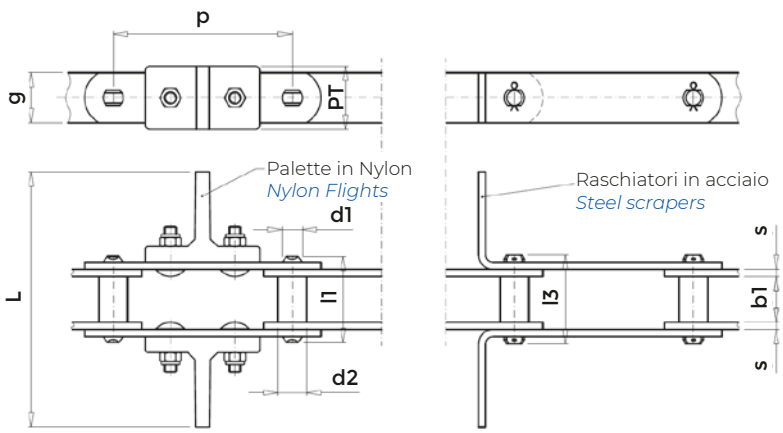

CATENE RASCHIANTI
DIN 8167 ISO/R – 1977 SMS 2083

SCRAPER CHAINS
DIN 8167 ISO/R – 1977 SMS 2083

	p	b1	d1	d2	g	s	l1	l3	PT	Fb
ISO	mm	mm	mm	mm	mm	mm	mm	mm	mm	Kg
Nr	-	min		-	-	-	max	max		
M 56	63*/80*/100*/125*/160*	24	10	15	30	4	52	72	45(L1)*	5710
M 80	80*/100*/125/160/200	28	12	18	35	5	62	86	45(L2)* 45(T)	8155
M 112	80*/100*/125/160/200/250	32	15	21	40	6	73	101	45(L2)* 45(T)	11417
M 160	100*/125/160/200/250	37	18	25	50	7	85	117	55(L2)* 56(T)	16310
M 224	125*/160/200/250	43	21	30	60	8	98	134	NO* 67(T)	22834
M 315	160/200/250/315	48	25	36	70	10	112	154	79 (T)	32110

CATENE RASCHIANTI
DIN 8165

SCRAPER CHAINS
DIN 8165

	p	b1	d1	d2	g	s	l1	l3	PT	Fb
DIN	mm	mm	mm	mm	mm	mm	mm	mm	mm	Kg
Nr	-	min		-	-	-	max	max		
FV 40	63/80/100/125/150/160	18	10	15	26	3	37	44	NO*	4070
FV 63	63*/80*/100*/125*/150*/160*	22	12	18	30	4	46	55	45(L1)	6420
FV 90	80*/100*/125/150/160/175	25	14	20	35	5	53	62	45(L2)* 45(T)	9174
FV 112	100*/125/150/160/175/200	30	16	22	40	6	63	72	45(L2)* 45(T)	11417
FV 140	100*/125/150/160/175/200	35	18	26	45	6	68	80	55(L2)* 56(T)	14270
FV 180	125/150/160/175/200/250	45	20	30	50	8	86	100	56(T)	18348
FV 250	125*/150/160/175/200/250	55	26	36	60	8	98	114	NO* 67(T)	25484
FV 315	150//160/175/200/250	65	30	42	70	10	117	133	79(T)	32110

Per le misure di catene contrassegnate con (*) è possibile montare solo palette a 'L'.
Per tutti i restanti tipi è possibile montare palette a 'L' o a 'T'.

Fb = Carico di rottura medio per materiale bonificato

Catena ribadita o copigliata a richiesta

For chain sizes with (*) available only flights type 'L'.
For all other sizes available both flights type 'L' or 'T'.

Fb = Average breaking load for through hardened material

Riveted or cottered chain on request