SERIE *Type* JCC-S

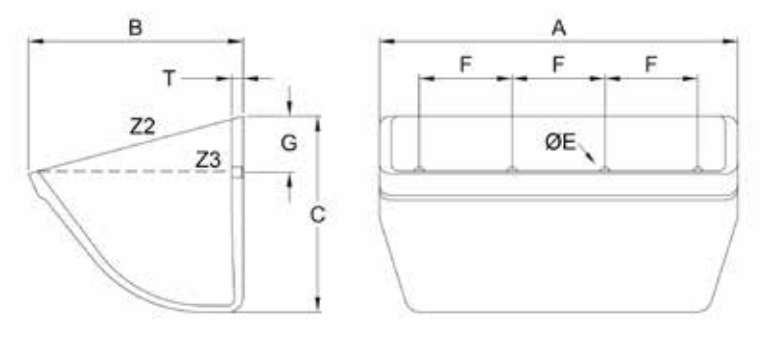

HDP POLIETILENE ALTA DENSITÀ
NY NYLON 6

HDP HIGH DENSITY POLYETHYLENE
NY NYLON 6

Tazza *Bucket*	A	B	C	D	T	Peso *Weight*	Capacità (Litri) *Capacity (Litres)*		N° fori *N° of holes*	E	F	G	tz/m *bk/m*
	mm	mm	mm	mm	mm	Kg	Z2	Z3	Bombati *Recessed*	ø mm	mm	mm	Max
JCC-S 14x8	377	234	211	148	13,0	2,20	9,44	7,38	5	11	75	60	4,6
JCC-S 16x8	432	234	211	148	13,0	2,42	10,92	8,55	6	11	70	60	4,6
JCC-S 18x8	483	234	211	148	13,0	2,70	12,42	9,73	5	11	95	60	4,6
JCC-S 20x8	534	234	211	148	13,0	2,86	13,83	10,85	6	11	90	60	4,6
JCC-S 22x8	585	234	211	148	13,5	3,26	15,16	11,89	6	11	100	60	4,6
JCC-S 24x8	634	234	211	148	13,5	3,52	16,51	12,96	7	11	90	60	4,6

* Peso delle tazze: Nylon +25%

** Buckets weight: Nylon +25%*

SERIE *Type* ATLAS AD

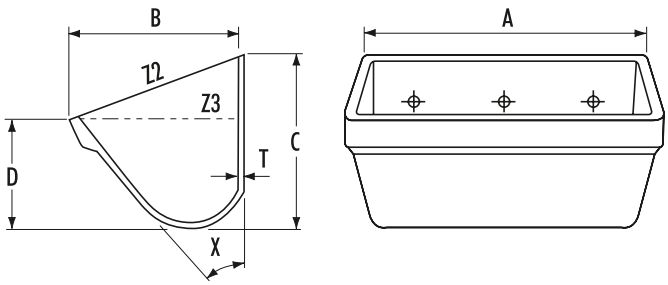

'NYRIM' NYLON-GOMMA
DIN 15234

'NYRIM' NYLON-RUBBER
DIN 15234

Tazza *Bucket*	DIM	A	B	C	D	T	X°	Peso *Weight*	Capacità (Litri) *Capacity (Litres)*	
	mm	mm	mm	mm	mm	mm		Kg	Z2	Z3
AD300	300 x 200	361	202	215	111	14,0	43	1,70	6,75	4,14
AD400	400 x 224	424	247	286	156	11,0	39	2,75	14,33	9,00
AD500	500 x 250	524	274	321	174	12,0	39	3,80	23,20	15,00
AD630	630 x 280	654	306	363	196	12,0	39	6,80	36,00	23,40

Foratura su richiesta - *Drilling on request*